Cadet European Judo Cup Bucharest 2021

(ROU Bucharest, 17-18 July 2021)

-57 kg

37 Judoka

POOL A

1 / 33	RUSSO, Savita	ITA
17 / 49	ARNAUDOVA, Ivelina	BUL
9 / 41	PIACENZA-HY, Elsa	FRA
25 / 57	VAN KERKHOF, Mirthe GULITE, Anna	NED LAT
5 / 37	TSIKLAURI, Nino	GEO
21 / 53	PIRVU, Alexandra	ROU
13 / 45	SHMUEL, Lior	ISR
29 / 61	KARLSSON, Hillevi	SWE

POOL B

3 / 35	STELLA, Gaia	ITA
19 / 51	BULANDA, Julia	POL
11 / 43	ZIHRI, Maillys	FRA
27 / 59	KARADAG, Aysenur	TUR
7 / 39	NISTOR, Patricia	ROU
23 / 55	NEDANOVSKA, Liljana MUKHINA, Olga	MKD RUS
15 / 47	SZASZ, Hanna	HUN
31 / 63	KUCHAVA, Iia	UKR

POOL C

2 / 34	GRAMATIKOVA, Snezhana	BUL
18 / 50	TOMBOLINI, Alisia LOLADZE, Nino	ITA GEO
10 / 42	PRISACAR, Cristina	MDA
26 / 58	BAKULINA, Tatiana	RUS
6 / 38	TOMANKOVA, Lenka	SVK
22 / 54	HENSEN, Faye	NED
14 / 46	HALBHEER, Svenja BOURSAS, Doria	SUI FRA
30 / 62	GRANUDD, Felicia	SWE

POOL D

4 / 36	OGUZ, Reyhan	TUR
20 / 52	DUMA, Carla KUZMINA, Daria	ROU RUS
12 / 44	RENES, Elena	NED
28 / 60	DEMATTE, Angelica	ITA
8 / 40	VER EECKE, Sara	BEL
24 / 56	SEIKKULA, Louna-Lumia	FIN
16 / 48	PRIMO, Kerem	ISR
32 / 64	GRASSIN, Eva	FRA

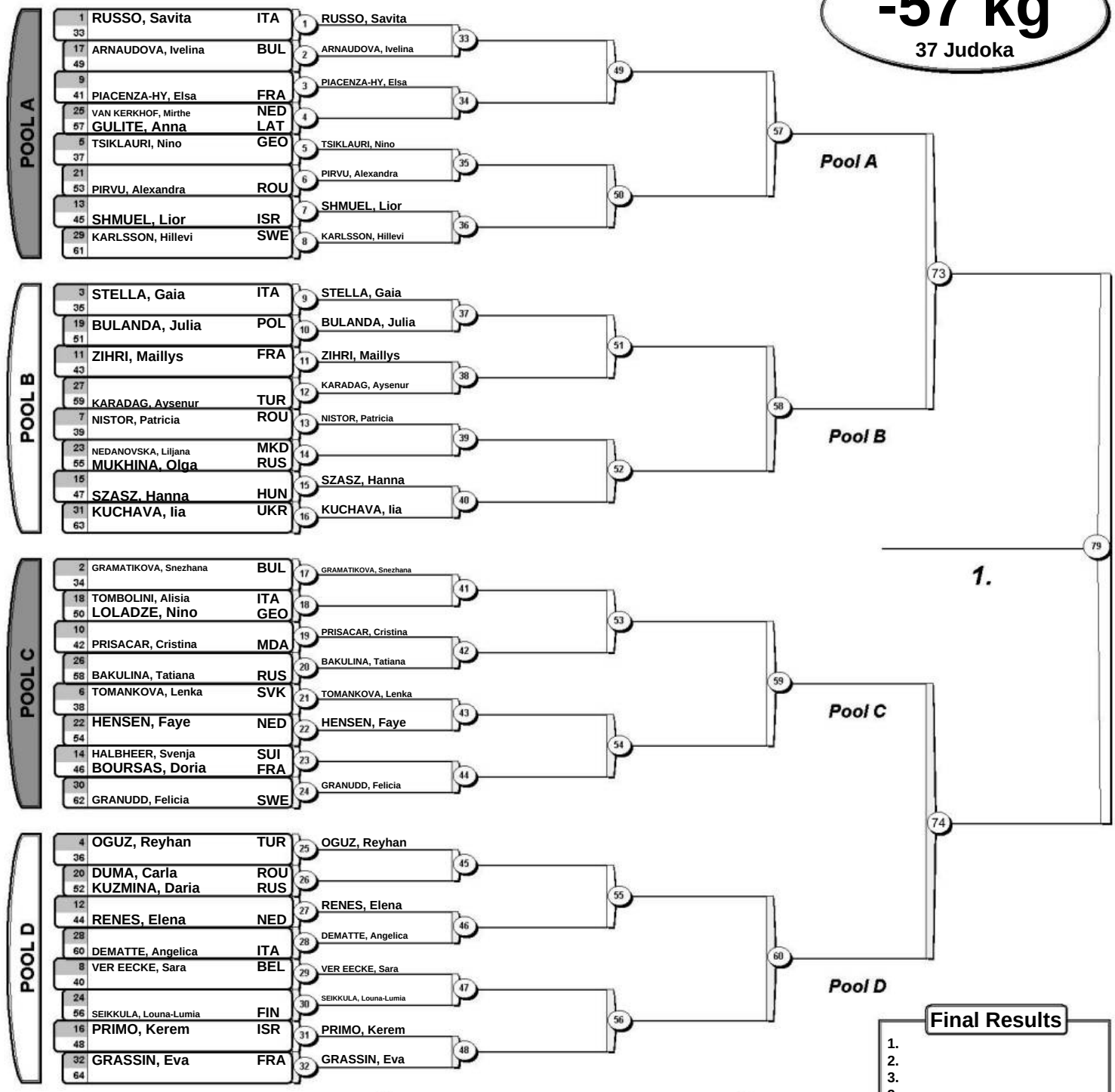

Final Results

1.
2.
3.
3.
5.
5.
7.
7.

Repechage

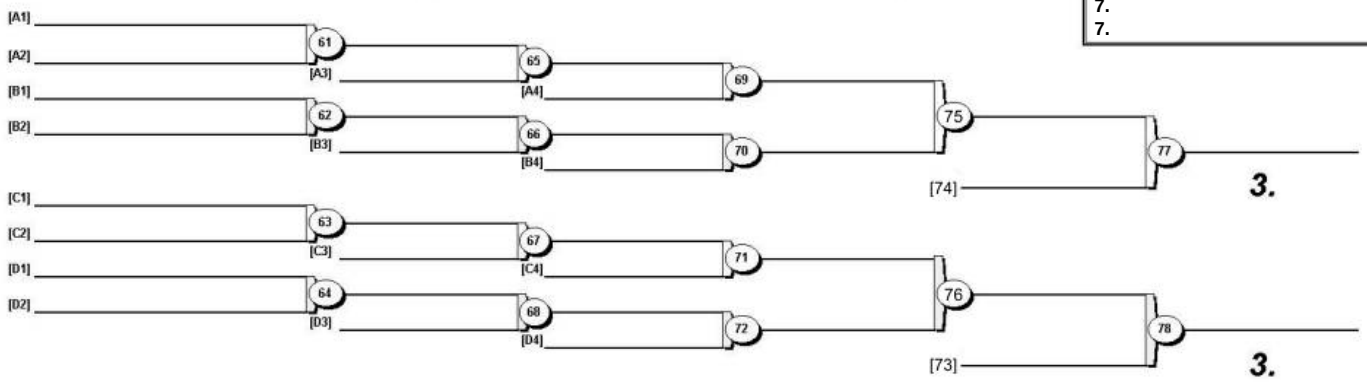

www.ippon.org (c) International Judo Federation IJF