Cadet European Judo Cup Zagreb 2022

(CRO Zagreb, 12-13 March 2022)

-48 kg

36 Judoka

POOL A

1 / 33	BABULFATH, Tara	SWE
17 / 49	NOUFAL, Noor	NED
	SOCOLSKY, Adi	ISR
9 / 41	MIDZIC, Hana	BIH
25 / 57	KOCHAUF, Maya	AUT
5 / 37	BOGDAN, Laura	ROU
21 / 53	COMBY, Romane	SUI
13 / 45	BUYUK, Sena Nur	TUR
29 / 61	AGATI-ALOUACHE, Manon	FRA

POOL B

3 / 35	ROCCO, Alessandra	ITA
19 / 51	BECKER, Libi	ISR
11 / 43	MEDILO, Charlize Isabelle	CAN
27 / 59	JUTTNER, Janka	HUN
7 / 39	ZUCCARO, Agnese	ITA
23 / 55	SHAVE, Amelia	GBR
	ALKIS, Merve Nur	TUR
15 / 47	RIZNAR, Urska	SLO
31 / 63	ZECIC, Marta	CRO

POOL C

2 / 34	SLAZOK, Wiktoria	POL
18 / 50	DANILKOV, Ekaterina	CAN
10 / 42	STERNON, Camille	BEL
26 / 58	KALAITSIDOU, Veronika	CYP
	HARRER, Ronja	AUT
6 / 38	VEG, Luca	HUN
22 / 54	HADAR, Noa	ISR
14 / 46	BOGA, Pinar	TUR
30 / 62	STORIONE, Elena	ITA

POOL D

4 / 36	POULANGE, Alyssia	FRA
20 / 52	SAVIC, Bojana	SRB
12 / 44	MARKOVICSOVA, Ella	SVK
28 / 60	PREJBEANU, Dorina	ROU
8 / 40	GASHI, Laurine	KOS
24 / 56	DINCER, Gizem	TUR
	BARISIC, Laura	CRO
16 / 48	STEVANOVIC, Milana	MNE
32 / 64	HANDAN, Narin	BIH

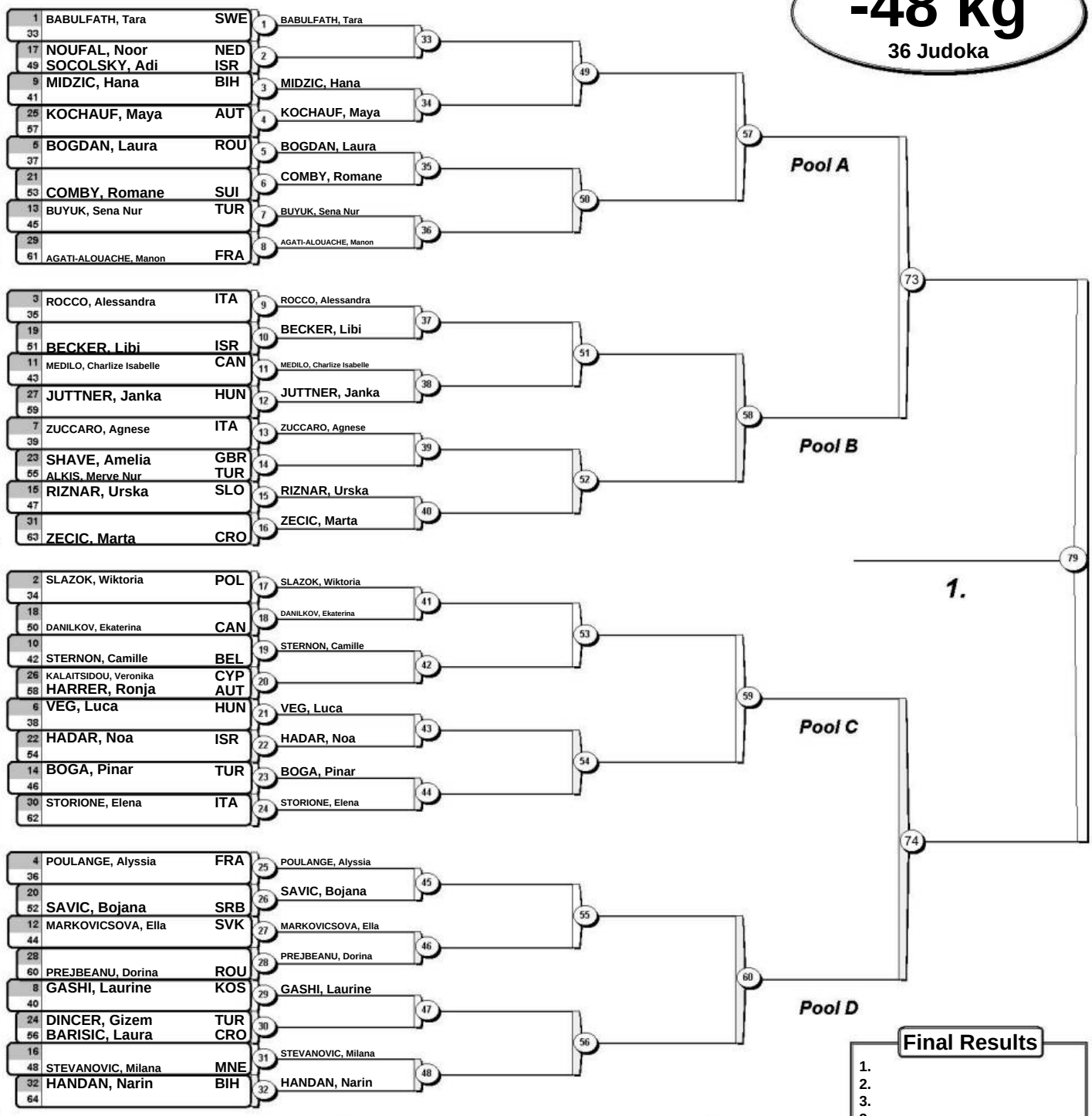

Final Results

1.
2.
3.
3.
5.
5.
7.
7.

Repechage

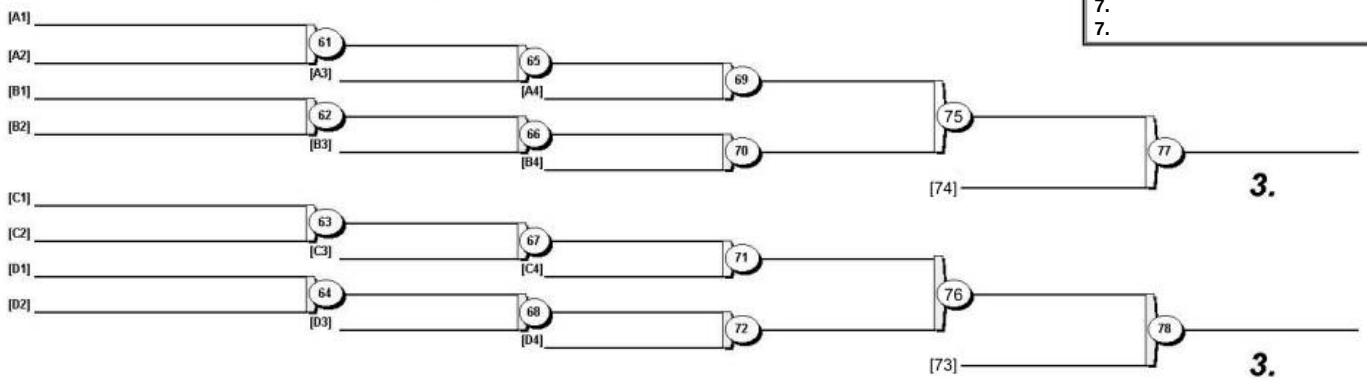

www.ippon.org (c) International Judo Federation IJF