Cadet European Judo Cup Zagreb 2022

(CRO Zagreb, 12-13 March 2022)

-63 kg

52 Judoka

POOL A

1 / 33	BOURSAS, Doria	FRA
17 / 49	KAYA, Zehranur ERTL, Luisa	TUR AUT
9 / 41	TOMANKOVA, Lenka MARKULIN, Nika	SVK CRO
25 / 57	BAGDASARYAN, Diana SZENTANDRASZKI, Greta	ISR HUN
5 / 37	DELAHUNTY, Olivia	GBR
21 / 53	BACKLUND, Vilda MUSIC, Maja	SWE SLO
13 / 45	LOVRIC, Leonarda JACOBS, Kiki	CRO NED
29 / 61	TOMBOLINI, Alisia	ITA

POOL B

3 / 35	CABARET, Naomi	FRA
19 / 51	BARICEVIC, Lucija ORUC, Sinem	CRO TUR
11 / 43	MAZOUZI, Leila KARASTRATIDOU, Eleni	SLO GRE
27 / 59	COVRE, Laura RYBOVA, Rozalie	ITA CZE
7 / 39	PEDE, Stefania	ITA
23 / 55	YOUNG, Madeleine KRENN, Sarah	GBR AUT
15 / 47	DZIDIC, Korina	BIH
31 / 63	KRUPL, Georgina BOARON, Lihi	HUN ISR

POOL C

2 / 34	STARZER, Emily	AUT
18 / 50	KELAVA, Dunja MLADENOVIC, Dunja	SLO SRB
10 / 42	SLACEK, Nika COSENZA, Ilaria	CRO ITA
26 / 58	GULENAY, Tuana SHATZKY, Shira	TUR ISR
6 / 38	PAPAGIANNAKI, Alexandra	GRE
22 / 54	SIMUNKOVA, Adela RENDER, Callie	CZE CAN
14 / 46	GLUBIAK, Magda TANCOCK, Queenie	POL GBR
30 / 62	KOZLJAK, Dzejla	BIH

POOL D

4 / 36	GEILEN, Joni	NED
20 / 52	BOTZHEIM, Bodza BAYR, Leonie	HUN AUT
12 / 44	ZAVRSNIK, Masa PODEA, Ariana	SLO ROU
28 / 60	XANTHOPOULOU, Sofia	GRE
8 / 40	KUZELOVA, Dominika	CZE
24 / 56	BAYLISS, Millie CASTIELLO, Chiara	GBR ITA
16 / 48	KUSKU, Elif CHAMRA, Maya	TUR ISR
32 / 64	BOTT, Olivia Alba VORACEK, Marta	SUI CRO

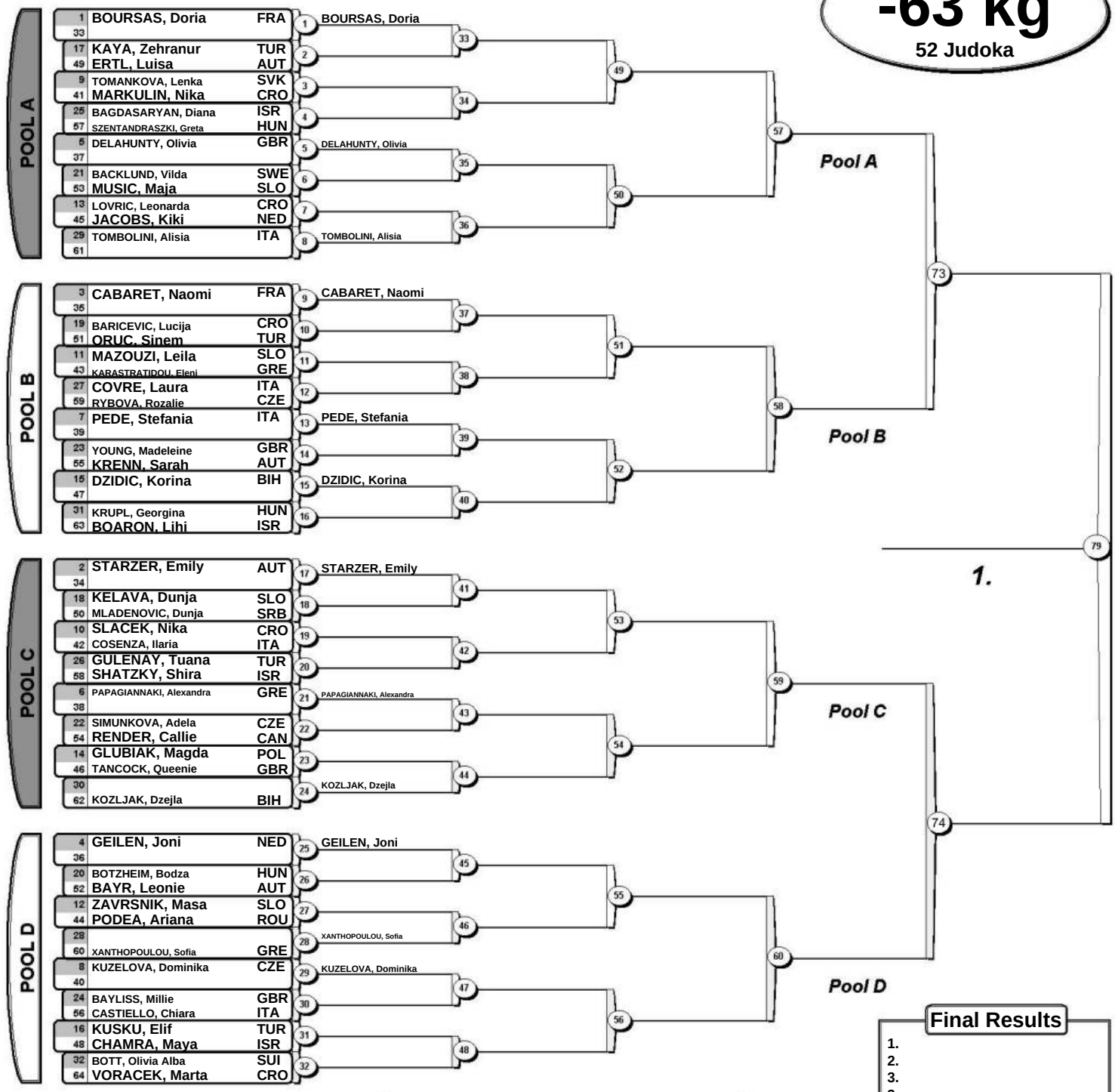

Final Results

1.
2.
3.
3.
5.
5.
7.
7.

Repechage

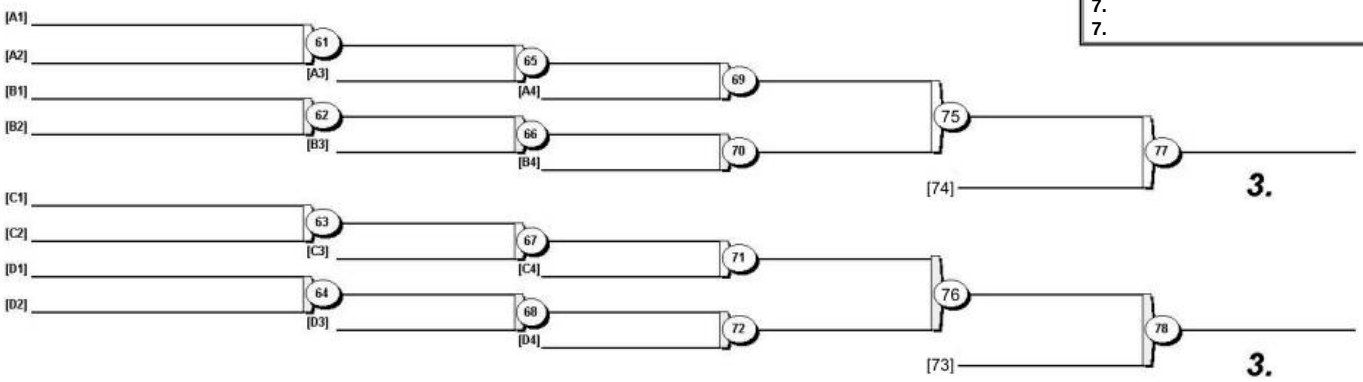

www.ippon.org (c) International Judo Federation IJF